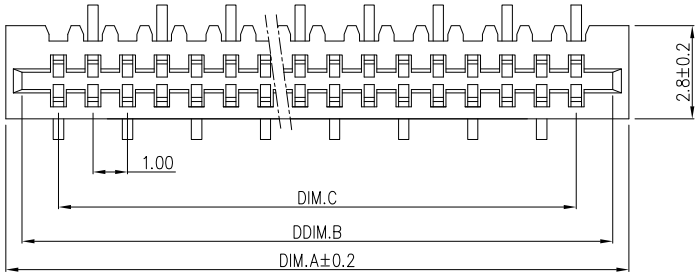

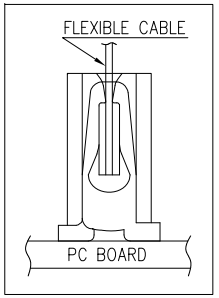

SPEC :
1. Housing:High-Temp Plastic,UL94-V
   Color:Brown
2. Locker:High-Temp Plastic,UL94-V
   Color:Black
3. Contact:Phosphor Bronze
   Initial:30m Ohms Max.
   Voltage Rating:50V AC,DC
4. Solder Tab:BRASS
5. Temperature Rating:-25°C~+85°C
6. Dielectric Withstanding Voltage:500V AC/Min

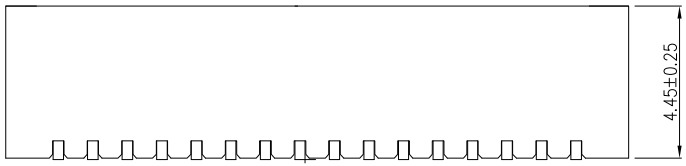

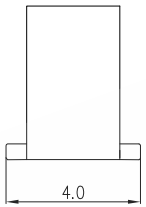

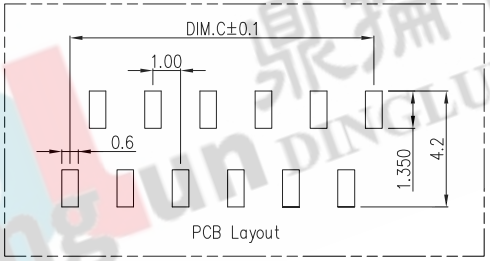

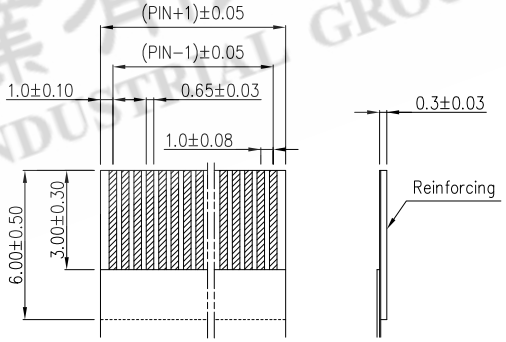

RFCOMMFNDFD FFC/FPC DIM.

●：表示現有可提供PIN數			
PIN	DIM.A	DIM.B	DIM.C
4	6.00	5.10	3.00
5	7.00	6.10	4.00
6	8.00	7.10	5.00
7	9.00	8.10	6.00
8	10.00	9.10	7.00
9	11.00	10.10	8.00
10	12.00	11.10	9.00
11	13.00	12.10	10.00
12	14.00	13.10	11.00
13	15.00	14.10	12.00
14	16.00	15.10	13.00
15	17.00	16.10	14.00
16	18.00	17.10	15.00
17	19.00	18.10	16.00
18	20.00	19.10	17.00
19	21.00	20.10	18.00
20	22.00	21.10	19.00
21	23.00	22.10	20.00
22	24.00	23.10	21.00
23	25.00	24.10	22.00
24	26.00	25.10	23.00
25	27.00	26.10	24.00
26	28.00	27.10	25.00
27	29.00	28.10	26.00
28	30.00	29.10	27.00
29	31.00	30.10	28.00
30	32.00	31.10	29.00
31	33.00	32.10	30.00
32	34.00	33.10	31.00
33	35.00	34.10	32.00

ORDERING INFORMATION:

FPCZ – 10445 GTDP – xx – x – x – x

- 1=ROHS 2=HALOGEN FREE
- PLATING: T=TIN G=GOLD FLASH
- PACKING T=TUBE R=REEL
- NO. of contacts
- Series name
- PITCH=1.0mm
- FPC SERIES

Dinglun 2017.08.23 文管中心

鼎掄實業有限公司
DINGLUN INDUSTRIAL CO. LTD.

DRAWN:	michael lin 2017/08/22	TOLERANCE	SCALE
		.X±0.30	None
CHECKED:	Eddie Liu 2017/08/22	.XX±0.20	UNIT
		.XXX±0.10	mm
APPROVED:	Eddie Liu 2017/08/23	PROJECTION	REV.
			A

TITLE: FPC 1.0PH 4.45H 無蓋凹槽立貼雙接正腳位

P/N NO.: FPCZ-10445GTDP-xx-xxx

DWG. NO.

CUSTOMER P/N NO.

REV.	REASONS	DATE	DRAWN
△			
△			
△			

鼎掄實業有限公司 DINGLUN INDUSTRIAL GROUP